ITEM 13

COMMUNITY BUILDING REPAIRS:

DISCUSSION AND POSSIBLE ACTION

Last month, the Board approved the new stairs but the rest of the projects were tabled. I still have the same quotes from last month and have not been able to get others

Evenflo Construction – Heated gutters	$1,950.00
Evenflo Construction – Non Heated gutters	$1,100.00
Guttermade – Heated gutters	$825.00
Guttermade – Non Heated Gutters	$600.00 includes facia boards
Royalty Gutters – Non Heated Gutters	$1,365.00 includes facia boards

Sanderson Landscape Solutions – Option A	$27,300.00
Sanderson Landscape Solutions – Option B	$25,050.00
Sanderson Landscape Solutions – Concrete	$11,040.00
Sanderson Landscape Solutions–Heated Gutter	$3,175.00
Sanderson Landscape Solution-Heated parking area	

Doran Construction – Option A everything	$26,220.48

Wrightwood Community Building Catch Basin Drain Installation

-Option - B

Legend

(Qty of 1) - Brooks / Jensen Precast - 2424 T-24 Traffic Rated Catch Basin with bolt down Steel Grate

(Qty of 2) - Brooks / Jensen Precast - 2424 T-24 Traffic Rated Catch Basin with bolt down Steel Cover

(Aprox 200') - 6" Sch 40 Plastic Pipe

Note: Pipe trench to be 1' wide, with the asphalt edges to be sawcut clean prior to backfilling with the colored concrete

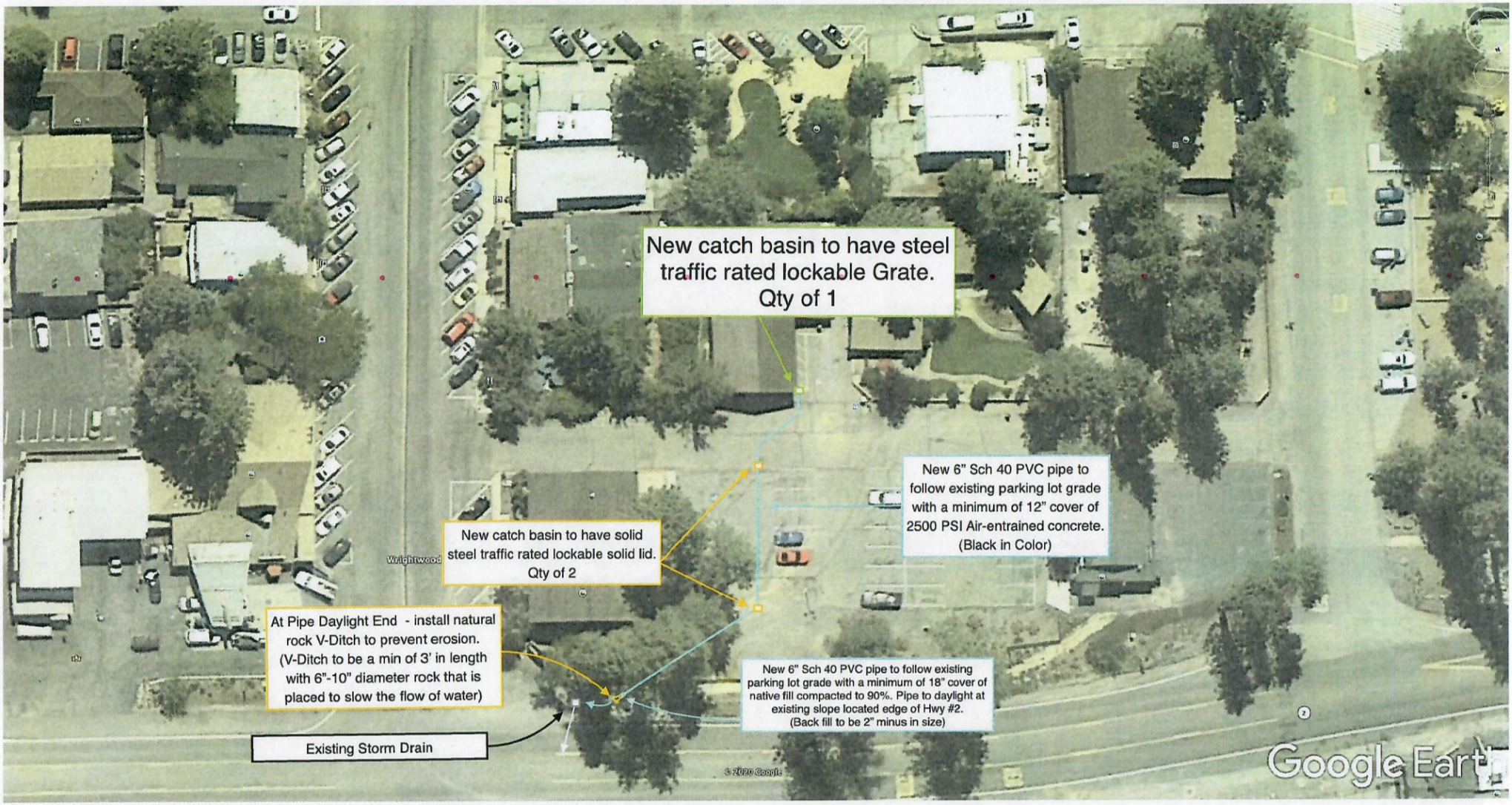

2424 STEEL GRATES

PARKWAY 48 lbs.
TRAFFIC 103 lbs.

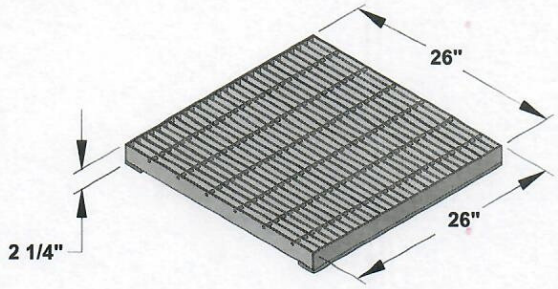

2424 STEEL COVER

PARKWAY 81 lbs.
TRAFFIC 114 lbs.

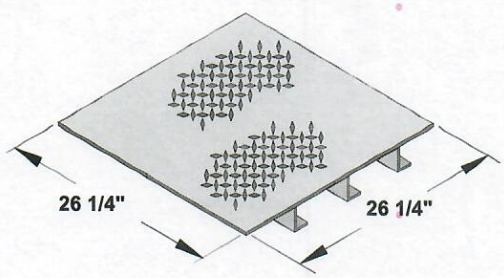

2424 TOP SECTION (*WITH GALVANIZED FRAME*)

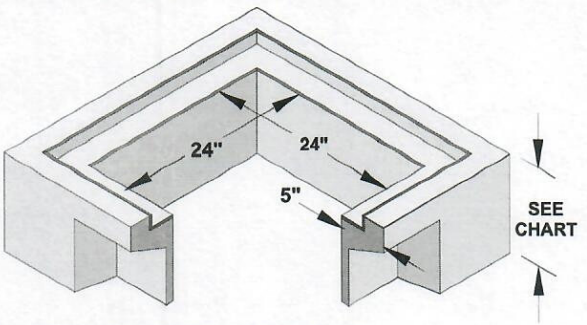

2424 LOWER SECTION (*NO FRAME*)

NOTE: USE 12", 18", 24" LOWERS TO INCREASE DEPTH UP TO A MAXIMUM OF 72"

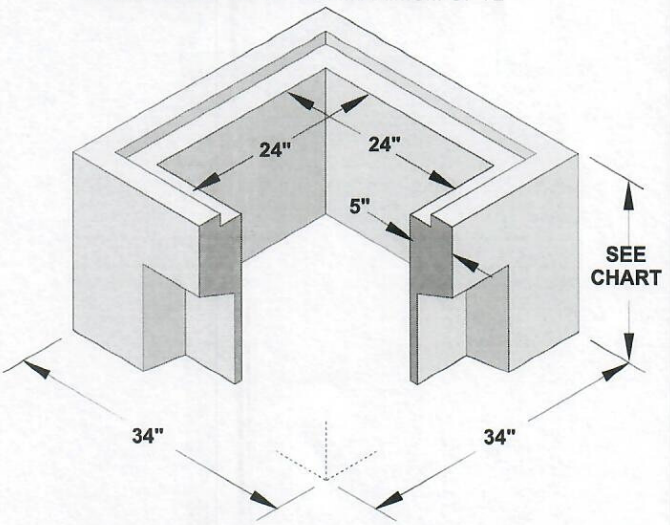

2424 BOTTOM SECTION (*WITH OR WITHOUT FRAME*)

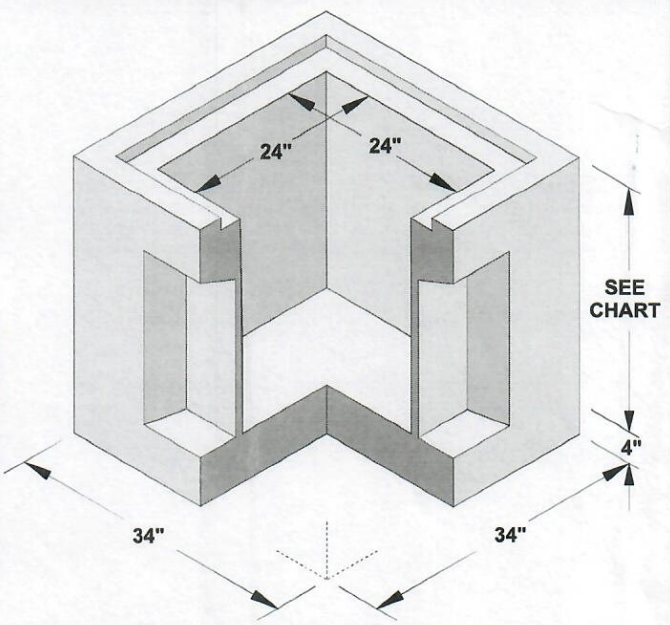

NOTES:

1. GRATES AND COVERS AVAILABLE PAINTED BLACK OR GALVANIZED
2. "ADA" GRATES AVAILABLE IN PARKWAY & TRAFFIC .
3. "HEEL PROOF" GRATES ARE AVAILABLE
4. A TOP SECTION WITH FRAME MUST BE USED IF BOLT DOWN REQUIRED

TOP SECTION	HT.	LBS	KNOCK-OUTS
2424 T6	6"	270	NONE
2424 T12	12"	495	(4) 6" x 11"
2424 T18	18"	745	(4) 9" x 12"
2424 T24	24"	870	(4) 14" x 14"

EXTENSION SECTION	HT.	LBS	KNOCK-OUTS
2424 E6	6"	270	NONE

LOWER SECTION	HT.	LBS	KNOCK-OUTS
2424 L12	12"	495	(4) 6" x 11"
2424 L18	18"	745	(4) 9" x 12"
2424 L24	24"	870	(4) 14" x 14"

BOTTOM SECTION	HT.	LBS	KNOCK-OUTS
2424 B30	30"	1595	(4) 18" x 18"
2424 B36	36"	1905	(4) 18" x 18"

24" x 24"
CATCH BASIN

ORG. DWG. DATE	REV. DWG. DATE
11-23-99	02-28-00

BROOKS PRODUCTS

2424 CB

Right side of building on L + Left side over the door

Evenflo Construction LLC

#1034314

Community Building

PO Box 3824, Apple Valley, CA 92307
P: 760-240-3037 F: 760-513-9797
www.goevenflo.com goevenflo1@verizon.net

Name: Lori Golden	**Date:** 4/23/2020
Phone: 760-220-8318	**Email:** lori@wrightwoodcsd.org
Address: 1275 HWY 2 Wrightwood	**Measurer:** Amy

PROPOSAL TO INSTALL AND FURNISH MATERIAL AND LABOR TO COMPLETE THE SPECIFICATIONS LISTED:

Gutter- 5" or 6"	ORD 75'
Downspouts- 2x3, 3x4, Round?	
1 story 1	2 story 2
Miter IS	0
Miter OS	0
Custom Miter	0
Leaf or Pine Guard?	None
Has Flashing?	Yes No**
Fascia: stucco, wood, rafter tails?	
DS Color	Forest Green
G Color	

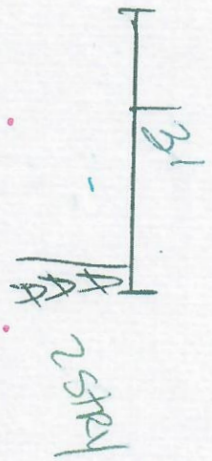

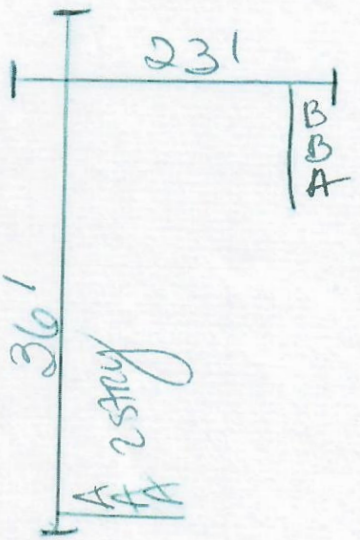

* Install of heat tape at comp Roofs & Downspouts. $850.00

* Electrical to be done by others. (3) outlets

JOB TOTAL: $ 1100.00

WORK AUTHORIZED BY (SIGN AND PRINT): _____

DATE: _____

PAYMENT IS DUE, IN FULL, UPON COMPLETION OF JOB. WE ACCEPT CASH, CHECK, CREDIT ($40 FEE MIN)

SPECIAL INSTRUCTIONS: ALL MATERIAL IS GUARANTEED TO BE AS SPECIFIED, ALL WORK TO BE COMPLETED IN A WORKMAN LIKE MANNER ACCORDING TO STANDARD PRACTICES. ANY ALTERATIONS OR DEVIATIONS FROM THE ABOVE SPECIFICATIONS INVOLVING EXTRA COST WILL BE EXECUTED ONLY UPON WRITTEN ORDERS AND WILL BECOME AN EXTRA CHARGE OVER AND ABOVE THE ORIGINAL ESTIMATE. ALL AGREEMENTS ARE CONTINGENT UPON STRIKES, ACCIDENTS, OR DELAYS BEYOND OUR CONTROL. **IF THE BALANCE DUE IS NOT PAID WITHIN 45 DAYS AFTER THE COMPLETION OF THE JOB A 25% LATE FEE WILL BE ADDED TO THE BALANCE DUE.**

BY SIGNING HERE, I UNDERSTAND THAT I **DO NOT HAVE FLASHING. I UNDERSTAND THAT MY RAIN GUTTERS MAY LEAK BETWEEN THE FASCIA AND GUTTER. EVENFLO HAS GIVEN ME A PRICE FOR FLASHING AND I HAVE DECLINED THE WORK. IF I WOULD LIKE EVENFLO TO USE ADDITIONAL CAULKING OTHER THAN THE NORMAL AMOUNT FOR A STANDARD INSTALL IT WILL ALSO RESULT IN ADDITIONAL FEES THAT I AGREE TO PAY TO HELP PREVENT THIS LEAKING CAUSED BY NOT HAVING FLASHING.

Right side of building on L + Left side over the door

Evenflo Construction LLC

#1034314

Community Building

PO Box 3824, Apple Valley, CA 92307
P: 760-240-3037 F: 760-513-9797
www.goevenflo.com goevenflo1@verizon.net

Name:	Lori Golden	**Date:**	4/23/2020
Phone:	760-220-8318	**Email:**	lori@wrightwardcsd.org
Address:	12715 Hwy 2 Wrightwood	**Measurer:**	Amy

PROPOSAL TO INSTALL AND FURNISH MATERIAL AND LABOR TO COMPLETE THE SPECIFICATIONS LISTED:

Gutter	5" or 6" ORD 175'
Downspouts- 2x3, 3x4, Round?	
1 story 1	2 story 2
Miter IS	0
Miter OS	0
Custom Miter	0
Leaf or Pine Guard?	None
Has Flashing?	Yes No**
Fascia: stucco, wood, rafter tails?	
DS Color	Forest Green
G Color	

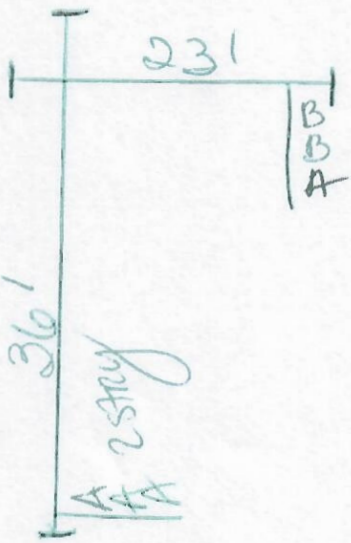

JOB TOTAL: $ 1100.00

WORK AUTHORIZED BY (SIGN AND PRINT): _____

DATE: _____

PAYMENT IS DUE, IN FULL, UPON COMPLETION OF JOB. WE ACCEPT CASH, CHECK, CREDIT ($40 FEE MIN)

SPECIAL INSTRUCTIONS: ALL MATERIAL IS GUARANTEED TO BE AS SPECIFIED, ALL WORK TO BE COMPLETED IN A WORKMAN LIKE MANNER ACCORDING TO STANDARD PRACTICES. ANY ALTERATIONS OR DEVIATIONS FROM THE ABOVE SPECIFICATIONS INVOLVING EXTRA COST WILL BE EXECUTED ONLY UPON WRITTEN ORDERS AND WILL BECOME AN EXTRA CHARGE OVER AND ABOVE THE ORIGINAL ESTIMATE. ALL AGREEMENTS ARE CONTINGENT UPON STRIKES, ACCIDENTS, OR DELAYS BEYOND OUR CONTROL. **IF THE BALANCE DUE IS NOT PAID WITHIN 45 DAYS AFTER THE COMPLETION OF THE JOB A 25% LATE FEE WILL BE ADDED TO THE BALANCE DUE.**

BY SIGNING HERE, I UNDERSTAND THAT I **DO NOT HAVE FLASHING. I UNDERSTAND THAT MY RAIN GUTTERS MAY LEAK BETWEEN THE FASCIA AND GUTTER. EVENFLO HAS GIVEN ME A PRICE FOR FLASHING AND I HAVE DECLINED THE WORK. IF I WOULD LIKE EVENFLO TO USE ADDITIONAL CAULKING OTHER THAN THE NORMAL AMOUNT FOR A STANDARD INSTALL IT WILL ALSO RESULT IN ADDITIONAL FEES THAT I AGREE TO PAY TO HELP PREVENT THIS LEAKING CAUSED BY NOT HAVING FLASHING.

SEAMLESS GUTTERS MADE BETTER
GUTTERMADE™

ESTIMATE

Richard Garza

487 S Joyce Ave
Rialto Ca 92376

(909) 549-8696
Guttermadebetter@gmail.com

For Lori (Wrightwood CSD)
1275 State Hwy 2 Wrightwood Ca 92397

Estimate Num 128
Date Feb 26, 2020

Description	Quantity	Rate	Amount
* Rain Gutter Installation	57	$8.00	$456.00
* Facia board replace/install	15	$10.00	$150.00
* Gutter Heaters	60	$3.75	$225.00

* Indicates non-taxable item

Replace,install aprox 15′ of facia board, and paint aprox 57′ of facia board. install aprox 57′ of rain gutter. Color to match trim(Evergreen)

Thank you for your business.

Subtotal	$831.00
Discount (0.72%)	- $6.00
Tax (8%)	$0.00
Total	$825.00
Balance Due	**$825.00**

Royalty Gutters LLC
SEAMLESS ALUMINUM RAIN GUTTERS

PO # 20-1275

California State Contractor License C43 #1036811
17819 Sultana Street
Hesperia, Ca 92345
Office: (909)939-2131
Toll Free: (877)868-0049
Fax: (909)696-2943

Proposal Submitted to: Date: 2-25-20

Name: Lori Golden Phone: 760-220-8378

Address: 1275 Hwy 2 City/Zip: Wrightwood, CA

5 YEAR WORKMANSHIP WARRANTY

WE PROPOSE TO FURNISH LABOR AND MATERIALS IN ACCORDANCE WITH THE SPECIFICATIONS AS FOLLOW

- Provide and install 5-inch seamless aluminum rain gutter system.
- Rain gutters to be secure to roof edge with appropriate size and type fastener.
- Clean Up and haul away all gutter and downspout debris.

Initials

Choose your colors carefully!

Any changes to color after material is ordered will result in a 40% restocking fee to your final invoice.

Gutter Color: Forest Green ☐

Downspout Color: Forest Green ☐

2"x 3" ☒ 3" Round ☐

OPTIONAL WORK:

Remove and haul away _____ feet of existing gutter and downspouts..... Additional Fee: $ 0

Install _____ feet of metal hidden leaf screen on gutter..... Additional Fee: $ 0

Drip Edge metal..... Yes ☒ No ☐ *Without drip edge roof metal, possible leakage

Corrections to this diagram must be done prior to accepting and signing this contract. Once you sign this contact, your gutters and downspouts will be installed per diagram and color as indicated above.** ***X=Downspout Location

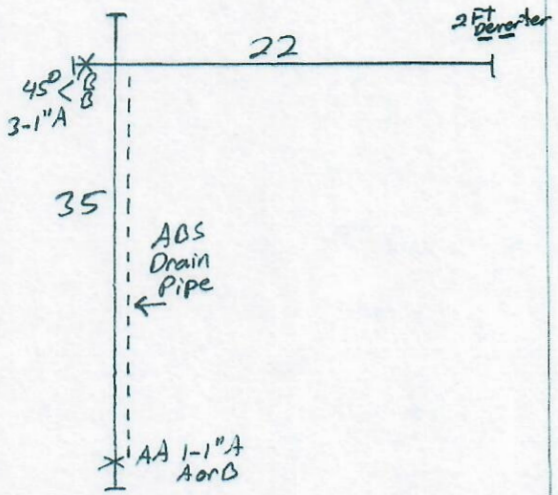

TOTAL PRICE: $ 1,365.00 (Including Optional work charge, If any.)	TOTAL AMOUNT DUE UPON COMPLETIONS OF PROJECT.	OPTIONAL WORK: $

Payments not made as indicated above shall be cause for cancellation of all warranties. Any amount not paid within (5) five business days of completion of work is subject to 2% per month service charge, and a $200.00 late charge. Any alterations or deviation from the above specifications involving extra cost of material and labor will only be executed upon written orders of the same and will become an extra charge over the sum mentioned in this contract. All agreements must be made in writing. This order becomes a binding contract when signed by purchaser and an authorized representative of Royalty Gutters. No statements or representations other than as set forth above shall bind any party, and no modifications can be made of this contract except in writing and signed by both parties.

Acceptance: You are hereby authorized to furnish all materials and labor to complete the work mentioned in the above Proposal and Contract for which I/We agree to pay the amount mentioned above in the said proposal, according to the terms thereof. I accept this proposal as a legal contract.

ACCEPTANCE

I have read both sides of this contract and completely understand the terms and conditions in which they apply.

Signature: _____

Print: _____

Date: _____

(3.00% fee will be applied)

MAKE CHECKS PAYABLE TO *ROYALTY GUTTERS LLC*

Representative Luis Ortiz

By: Luis Ortiz

Date: 2-25-20

YOU, THE BUYER MAY CANCEL THIS CONTRACT AT ANYTIME PRIOR TO MIDNIGHT OF THE THIRD BUSINESS DAY. UNDERSTAND THAT IF I CANCEL THIS CONTRACT AFTER THE THIRD BUSINESS DAY I WILL LIABLE FOR 30% OF THE CONTRACT PRICE.

Sanderson Landscape Solutions

LIC C-27: 1049904
DIR #: 1000380305

Proposal: WCSD Drainage and Concrete **SLS Base Bids and Recommendations**	Date: 5/26/2020
Location of Performance: 1275 CA HW 2, Wrightwood, CA 92397	Written by: Cole Sanderson
Project Owner: Wrightwood Community Services District	Title: Owner

WE HEREBY PROPOSE TO FURNISH THE FOLLOWING:

BASE BID INCLUDES:

- Although resurfacing concrete is common practice, in this case with the harsh conditions that wrightwood experiences in the winter months, and the use of the building, the end products will not last. SLS will not provide resurfacing to outdoor surfaces in the mountain areas because we cannot guarantee lasting results.
- WCSD to confirm locations of all accepted features before demolition begins.
- All concrete is to be 3500 PSI with ⅜" aggregate unless otherwise mentioned, with #4 rebar 18" OC max throughout slab with air. It will be placed immediately on top of native soils with a thickened edge. Trucked in and pumped into place where needed. The addition of heating elements in all concrete work is contingent upon acceptance of the drainage work as well as the installation of the heated concrete system.
- This proposal will make as a great complement for the proposal provided by Davison Electric. Accompanied with the acceptance of Davison Electrics proposal, Bill will provide electrical to both gutters and downspouts which will be controlled via power switch.
    - Davison Electric will also furnish and install electrical conduit, pull boxes and power as needed to supply power for the heated concrete features. His conduit will be placed in the same trench and the drainage and catch basins. Trenches dug and backfilled by SLS.

ITEM:	DESCRIPTION:	COST:$ $
Mobilization	Mobilization, temp fence, insurance, ect.	$5,600
Catch Basins -Option A, 6" PVC drainage, V-ditch and concrete patch back	**ITEM (6, 7, 8)**- Saw cut and dispose of asphalt and spoils, trench 26" min depth to accommodate new plumbing. Furnish and install 4 catch basins (Brooks model 2424 CB) with 260' of 6'' Sch. 40 PVC PVC, pipe will daylight at location per drawings. Min 18" of cover, 12" of 3500 PSI with 1"- rock, air entrained, two pieces of #5 rebar lengthwise and 18" OC thereafter, black in color,medium broom finish. (1) application of asphalt tack to seal joints where new	$21,700

	concrete and asphalt meet in the parking lot area. Install a 3'x30" V-ditch with 6-10" cobble stone set in concrete to slow flow of water and eliminate sediment erosion into the storm drain system. V-ditch will drain into the existing storm drain apron at opening. Install per drawings provided by SLS and Google earth drawing OPTION A.	

BASE BID and Alternates EXCLUDES:

- New railings for stairs, fabrication, wall demo, cap repairs, utility box or riser extension modification, stone veneer repairs, painting, construction water, waterproofing, asphalt sealing or patching or painting, electrical install upstream of radiant heating box, electrical work, fascia board repair or painting, local or county or state permits or fees, dowels
- **California DOT COSTS**- After discussing the potential project with Imam Beshay (909-388-7058) in permitting from the California Department of Transportation, an $820 initial encroachment permit will be required, $82 per hour thereafter for any additional processing or inspection work (She explained extra work may not be required because it is a small project).
- **San Bernardino County Costs**- After discussing the potential project with Eric (909-387-8311) in Land Development, he did not believe that any permits fees or inspections would be needed for any gutters or concrete replacement. (Electrical if used probably may require inspections from county)
- Bond Rate at 3%, Submittals
- Anything not specifically mentioned in the above "INCLUDES" list.

Extras or Alternates:

Item:	Description:	Cost: $$
Catch Basins - Option B 6" PVC drainage, V-ditch and concrete patch back	Saw cut and dispose of asphalt and spoils, trench 26" min depth to accommodate new plumbing. Furnish and install 3 catch basins (Brooks model 2424 CB) with approximately 200' of 6'' Sch. 40 PVC PVC, pipe will daylight at location per drawings. Min 18" of cover, 12" of 3500 PSI with 1"- rock, air entrained, two pieces of #5 rebar lengthwise and 18" OC thereafter, black in color, medium broom finish. (1) application of asphalt tack to seal joints where new concrete and asphalt meet in the parking lot area. Install a 3'x30" V-ditch with 6-10" cobble stone set in concrete to slow flow of water and eliminate sediment erosion into the storm drain system. V-ditch will drain into the existing storm drain apron at opening. Install per drawings provided by SLS and Google earth drawing OPTION B.	Add $19,450
Emergency	**ITEM (1)**- Demolish and dispose of the entire Emergency exit	$4,560

Exit Concrete	staircase. Replace with new concrete, and reuse existing railing.	
Concrete Front Patio and Stairs	**ITEM (2 and 4)**- Demolish and dispose of the existing front patio slab, stairs and landings. Replace with new concrete at 4" thick x 4' wide with3500 PSI concrete containing 1"- rock, air entrained, #5 rebar 18" OC, no color ,medium broom finish.	$6,480
Flat Work	**ITEM (3)**- Saw cut, demolish and dispose of asphalt to accommodate new concrete in between east staircases landing the emergency exits landing, 4" thick x 4' wide of 3500 PSI with 1"- rock, air entrained, #5 rebar 18" OC, black in color, medium broom finish.	$3,480
Disabled Parking Stall	**ITEM (9)-** Remove and replace existing asphalt to furnish and install 4" of new concrete at 4000 PSI with 1"- rock, air entrained, #5 rebar 18" OC, no color, thickened edge, medium broom finish. Slab is approximately 31'x26'.	$8,760
Heating elements for Concrete	Heated Concrete instal is contingent on the acceptance of the (catch basins install, Opt. A) as well as the (electrical work by others) and (replacement of new concrete per drawings). This is because electrical conduit will be installed in the same trench as 6" pipe and under 12" of new concrete. Heating elements will be controlled with a temperature sensor mounted on the Peak of the building. Trenches for electrical will be dug and backfilled by SLS but electrical conduit, detection tape and wire by others.	$18,500
Rain Gutters	**ITEM (5)**- Furnish and Install 5" white rain Gutters. 25' on the east side and 35" on the west side. 1 downspout per side at corner of buildings epr side. Tie into new underground plumbing if applicable with cleanout.	$2,400
Heating elements for Rain Gutters	Heated gutters are contingent on the acceptance of the electrical work by others. SLS will install the gutters and downspouts and heating elements. The low voltage will be wired in by others.	$775
20' Wood Fence	Furnish and install a 20' section of wood fence on the south side of the trail near 6" pipe daylight and V-Ditch, to help channel foot traffic and avoid the trip hazards. Drive posts into native soils, no concrete.	$140

ADDENDUMS NOTED:

PAYMENT TERMS FOR BASE BID, ALTERNATES AND CHANGE ORDERS:

- Mobilization

BASE BID	$27,300.

ALL WORK TO BE DONE IN STRICT ACCORDANCE WITH UBC, DSA AND LOCAL CODES, ALL MATERIAL IS TO BE PER PLANS AND SPECIFICATION UNLESS EXCLUDED ABOVE. ALL WORK IS TO BE COMPLETED IN A WORKMANLIKE MANNER ACCORDING TO STANDARD PRACTICES. ANY ALTERATION OR DEVIATION FROM THE ABOVE SPECIFICATIONS INVOLVING EXTRA COST WILL BE EXECUTED ONLY UPON WRITTEN ORDERS AND WILL BECOME A CHANGE ORDER AND ABOVE THE ORIGINAL ESTIMATE. OWNER IS TO CARRY FIRE, THEFT, AND COURSE OF CONSTRUCTION INSURANCE. OUR WORKERS ARE COVERED BY WORKMAN'S COMPENSATION INSURANCE AND GENERAL LIABILITY INSURANCE OF 1,000,000. ADDITIONAL INSURED ENDORSEMENT IS AN ADDITIONAL FEE ACCEPTANCE OF PROPOSAL. THE ABOVE PRICES, SPECIFICATIONS, AND CONDITIONS ARE SATISFACTORY AND ARE HEREBY ACCEPTED. YOU ARE AUTHORIZED TO DO THE WORK AS SPECIFIED.

Date:	Signature:

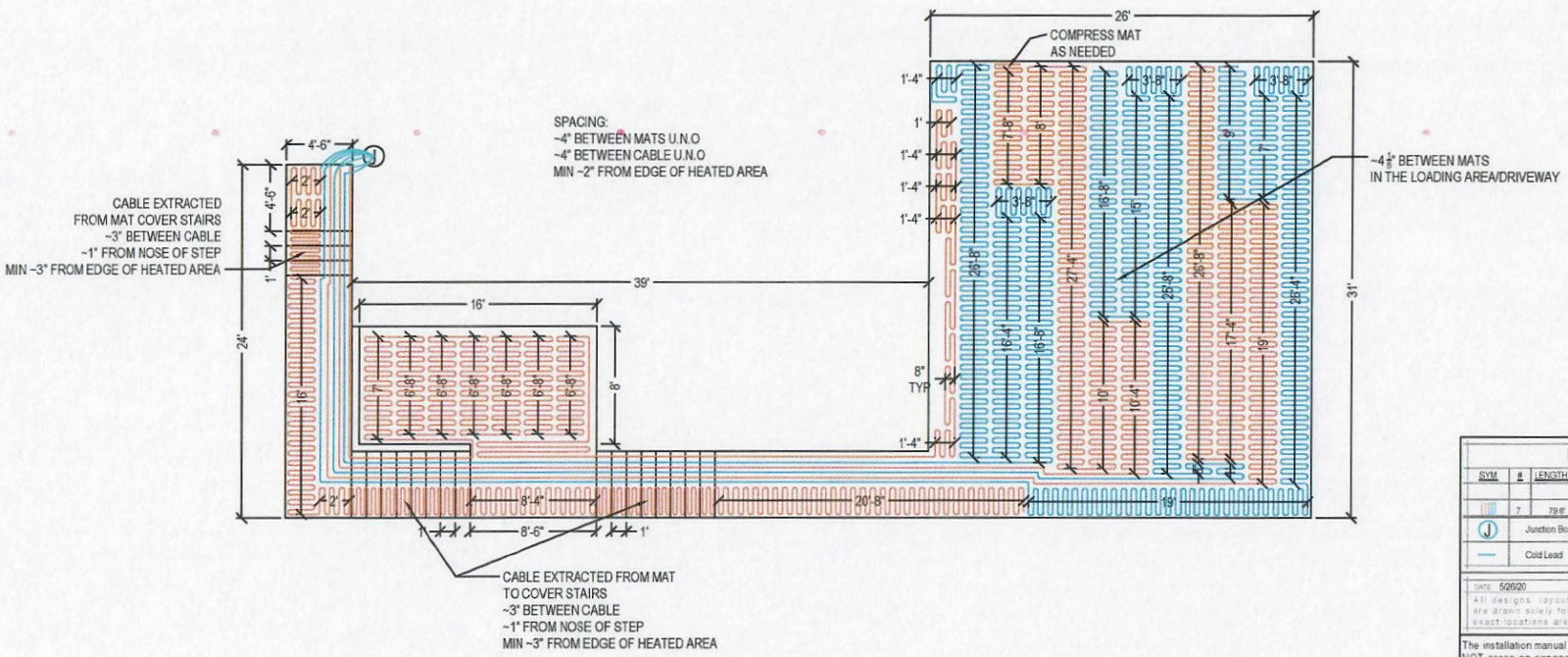

Heat Layout

SYM	#	LENGTH	SYSTEM
	7	79.6'	CZ mat 240V, 37W
J	Junction Box (Power)		
—	Cold Lead		

DATE 5/26/20 DRAWN BY K.R. Jones

All designs, layouts, junction boxes and cold leads are drawn solely for an example of their location. The exact locations are chosen by the on-site contractor.

The installation manual MUST be followed. Heating cables must NOT cross an expansion joint and MUST be embedded to prevent over-heating. They should NEVER be cut, touch, or cross over another heating cable. To avoid over-heating, cable spacing MUST be no less than 2" on center (o/c). To avoid under-heating, cable spacing should be 4" o/c or less. Heating element must be secured or anchored 2" below the surface to prevent floating or sinking during covering installation. If you have installation questions call 801.948.7577.

Important Note: This document and all its renderings, information, statements, projections, illustrations, and other material provided herein have been provided for discussion and illustration purposes only. Warmzone Management, LLC makes no representations or warranties, express or implied, as to its accuracy and it should not be relied upon as definitive, accurate, to scale, reliable, binding, or otherwise ready for use in actual construction. By accepting this document, you agree to indemnify and hold Warmzone Management, LLC, its owners, managers, and agents harmless from any and all damages that may be claimed to be attributable to this document or to its preparation.

NOTE: FIELD VERIFY ALL DIMENSIONS

QUOTE: 65075

WARMZONE
Premier Radiant Heating
12937 South 265 West, Suite 100
Draper, UT 84020
(800) 408-9376
info@warmzone.com
Jeff Winegar

Cole Sanderson

Heat System Layout - 240V ClearZone

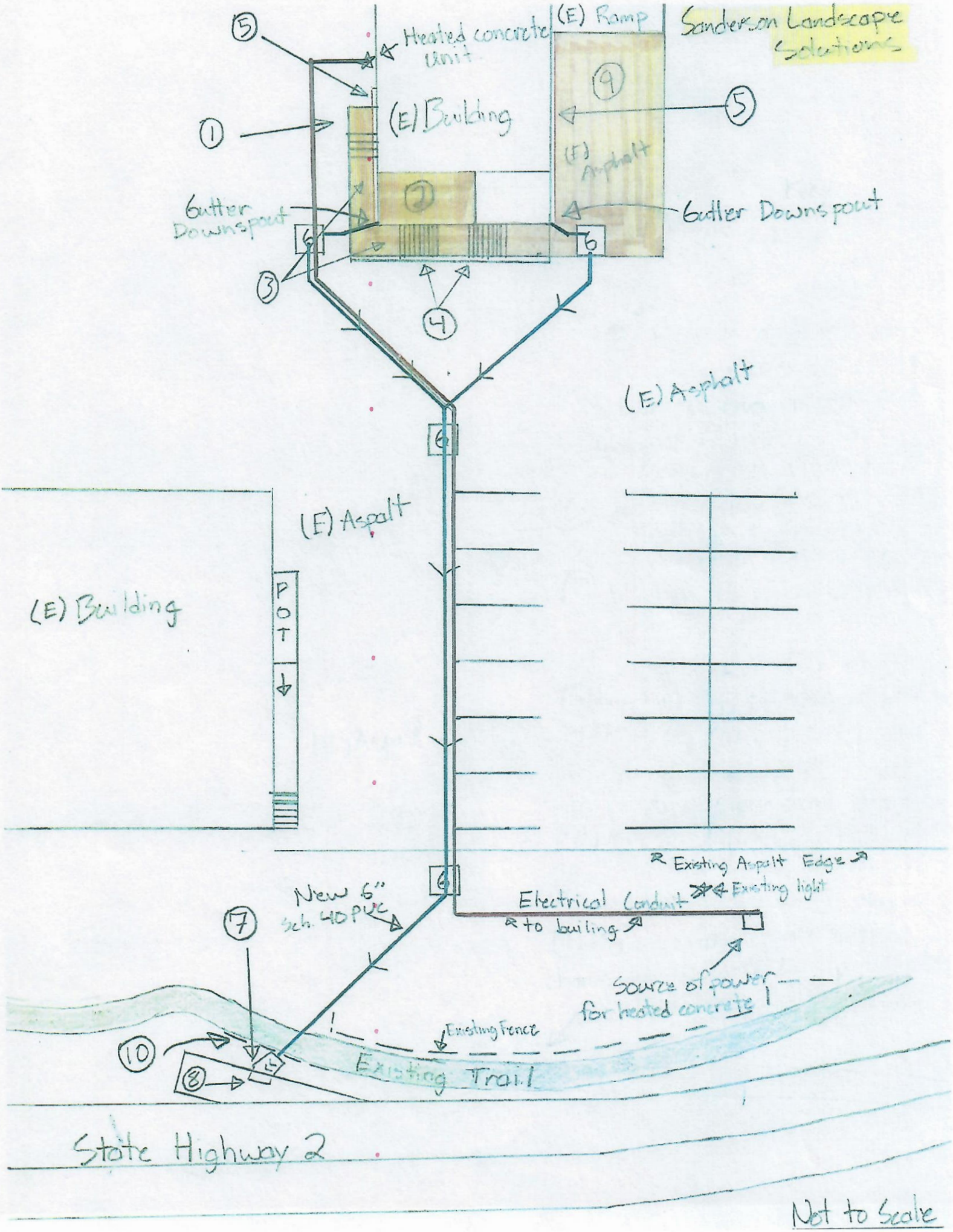
Sanderson Landscape Solutions
(E) Ramp
Heated concrete unit
(E) Building
(F) Asphalt
Gutter Downspout
Gutter Downspout
(E) Asphalt
(E) Asphalt
(E) Building
POT
Existing Asphalt Edge
Existing light
New 6" Sch. 40 PVC
Electrical Conduit to building
Source of power for heated concrete
Existing Fence
Existing Trail
State Highway 2
Not to Scale

Construction Proposal

Doran Construction LLC

May 25, 2020
Wrightwood CSD SItework
1275 Satte Hwy 2
Wrightwood, CA 92397

Main Office
Doran Construction LLC
1041 N. Cypress St.
La Habra, California 90631
562-448-3428 main
562-696-2162 fax

Wrightwood Office
Doran Construction and Snow Removal
681 Oriole Rd.
P.O.Box 2528
Wrightwood, CA 92397
760-249-5416 off.
562-833-9784 cell.

Proposal

May 25, 2020

Between the Owner:	**Wrightwood CSD c/o Lori** **1275 Satte Hwy 2** **Wrightwood, CA 92397** **760-249-3205**
And:	**Doran Construction LLC** **1041 N. Cypress St.** **La Habra, California 90631** **562-833-9784 cell** **45-5104824** **Duns# 02-746-5881**
For the Project:	**Wrightwood CSD SItework** **1275 Satte Hwy 2** **Wrightwood, CA 92397**

SCOPE OF WORK:
Perform installation of heated rain gutters, Installation of drainage system and concrete steps per job walk and supplied drawing.

TOTAL BASE PRICE: **$26,220.48**

Project Totals:

DIV. 02 - SITE WORK

02751 - Concrete Pads and Walks

Demo existing east side concrete stoop and stairs (includes disposal)	*$425.00*
Prep, form, reinforce and pour Air Entrained light broom finish stoop and steps to meet all ADA and building codes **General Notes:** Includes embedded sleeves for new railing	*$960.00*
Demo existing main entry steps and pads (includes disposal) care will be given to minimize damage to surrounding stone. **General Notes:** Any damaged stack stone to be accessed and replaced as need for additional cost at $22 psf.	*$1,275.00*
Prep, form, reinforce and pour Air Entrained light broom finish entry stairs and pads to meet all ADA and building codes	*$3,575.00*
02751 - Concrete Pads and Walks	**$6,235.00**

02800 - Site Amenities

Sawcut approx. 350 lin feet for new trench in asphalt parking lot	*$1,575.00*
Disposal	*$550.00*
Excavate approx. 260 lin feet of 12" wide trench minimum 18"-24" deep to provide min. 12" cover of new drain pipe	*$1,200.00*
Shade in new drainage pipe with fill sand and place "Buried Pipe" ribbon approx. 10" above pipe. Backfill and compact trench to 90-95%	*$900.00*
Supply and Install approx. 260 lin. feet of 6" SCH40 drain pipe, (2) precast 24x24 catch basins with Traffic rated bolt down steel grates and (2) precast 24x24 catch basins with bolt down steel covers to provide drainage from new downspouts to Hwy 2	*$6,500.00*
Clean all edges and pour black colored Air Entrained concrete patch at all trench in asphalt parking lot	*$2,100.00*
02800 - Site Amenities	**$12,825.00**

SUBTOTAL DIV. 02 - SITE WORK	**$19,060.00**

DIV. 07 - THERMAL AND MOISTURE

07714 - Gutters and Downspouts

Supply approx. 59 linear feet of seamless raingutter at west side of community center building with downspot at North west corner (includes short section of approx. 2ft by restrooms) *$826.00*

General Notes:
Gutters and downspout profile and color TBD

Supply approx. 59 linear feet of seamless raingutter at west side of community center building with downspot at North west corner (includes short section of approx. 2ft by restrooms) *$364.00*

General Notes:
Gutters and downspout profile and color TBD

Supply and Install heating elements for westside raingutters (electric supply NIC) *$480.00*

General Notes:
The heating elements will be placed in gutter and in the lower 12" of the roof shingles in a "S" pattern to prevent ice dams

Supply and Install heating elements for east side raingutters (electric supply NIC) *$208.00*

General Notes:
The heating elements will be placed in gutter and in the lower 12" of the roof shingles in a "S" pattern to prevent ice dams

Supply and Install power receptacles as needed for heated gutters on east side *$550.00*

General Notes:
20 amp circuits with exterior grade boxes/conduits

Supply and Install power receptacles as needed for heated gutters on east side *$275.00*

General Notes:
20 amp circuits with exterior grade boxes/conduits

07714 - Gutters and Downspouts **$2,703.00**

SUBTOTAL DIV. 07 - THERMAL AND MOISTURE **$2,703.00**

COMPANY OVERHEAD & MARGIN

Company Overhead	
Company Overhead Percentage	*$786.61*
Company Overhead	**$786.61**
Company Margin	
Company's Profit Margin	*$3,670.87*
Company Margin	**$3,670.87**
SUBTOTAL COMPANY OVERHEAD & MARGIN	**$4,457.48**

GRAND TOTAL	**$26,220.48**

Exclusions: Design, plans, permits, city submittal's, city fee's, unforeseen conditions, lead and asbestos abatement.

Proposal is good for 15 days due to material cost fluctuation

Acceptance of Agreement

By signing below, client agrees to payment terms: Upon acceptance a deposit of 10% of proposed cost is due. Balance of contract to be billed for weekly on a % complete basis and materials purchased. Any change to the scope of work will be treated as a change order. CO's must be approved in writing or electronically prior to commencement. All CO's include profit and overhead and are billed at 50% upon acceptance.

Doran Construction LLC Date

Client Signature Date

ITEM 14

PER CAPITA GRANT:

DISCUSSION AND POSSIBLE ACTION

I received notification on June 25th that the allocation of the Per Capita Grant has been made. The Wrightwood CSD portion is $181,504. It is contingent on the state budget being passed. The next step is attending an online class on how to file the paperwork with the state. This is a class every Grant award area needs to attend. We do need to look at the items we would like to use the grant for.

ITEM 15

CSD BUILDING OPENING:

DISCUSSION AND POSSIBLE ACTION

ITEM 16

BOARD POSITIONS:

DISCUSSION AND POSSIBLE ACTION

July is the beginning of a new fiscal year. We have the opportunity to appoint a new President and Vice President to the board.

ITEM 17

PERMANENT APPROPRIATIONS LIMIT MEASURE:

DISCUSSION AND POSSIBLE ACTION

ITEM 18

RECESS TO CLOSED SESSION: CONFERENCE WITH LABOR NEGOTIATORS

ITEM 19

RETURN TO OPEN SESSION: ANNOUNCEMENT OF REPORTABLE CLOSED SESSION ACTIONS

ITEM 20

FUTURE BOARD

MEETING

AUGUST 4, 2020:

DISCUSSION AND POSSIBLE ACTION

ITEM 21

DIRECTORS COMMENTS

ITEM 22

ADJOURNMENT